Arakno Wall Maxi– Telescopic video projector wall mount

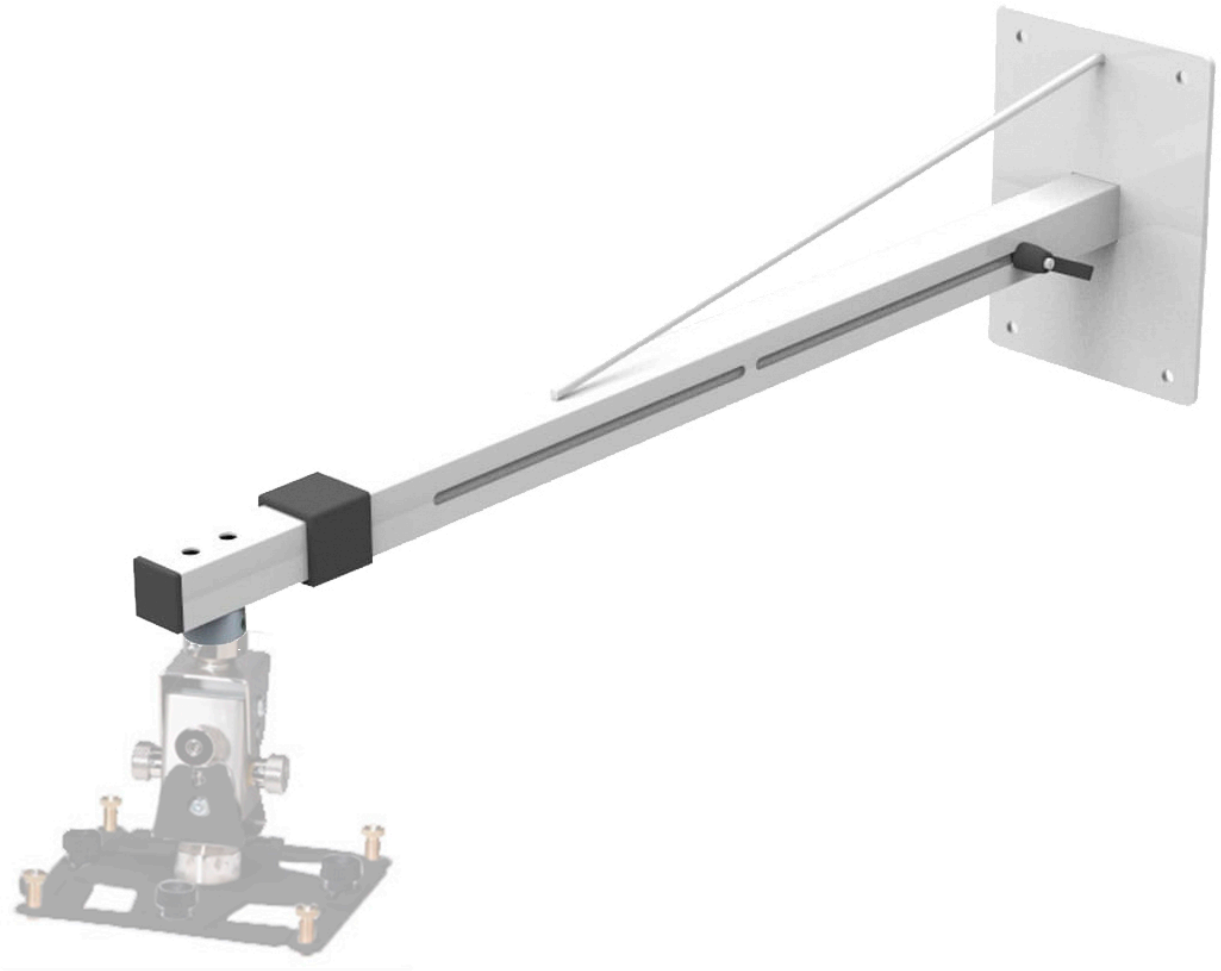

EUROMET Srl - P.Iva IT00852140425 - Z. I. Brodolini, 40B - 60025 - Loreto (AN) - Tel. +39.071976444 - Fax +39.071978988 - Vendite: sales@euromet.com - Ufficio Tecnico: tech@euromet.com - Amm. : amministrazione@euromet.com

Arakno Wall Maxi– Telescopic video projector wall mount

P/N: 27191

Colour: White

Adjustable wall bracket for video projectors, ideal for wall applications with high performance and large projectors.
Arakno wall enables quick and easy projector installation.
The Arakno adjustment system allows for precise, reliable and fast focusing of the image

Arakno is not included.

Also available in colour variants:

- **Black (Cod: 27190)**

Specifiche

Net weight	14 kg
Closed Length	320x200x1500mm
Max Load	45 kg
Angolo di Rotazione	360°
Tilt angle	+/- 25°
Material	Fe (structure)
Treatments	powder-coated black/white
Education	edu

EUROMET Srl - P.Iva IT00852140425 - Z. I. Brodolini, 40B - 60025 - Loreto (AN) - Tel. +39.071976444 - Fax +39.071978988 - Vendite: sales@euromet.com - Ufficio Tecnico: tech@euromet.com - Amm. : amministrazione@euromet.com

Galleria Immagini



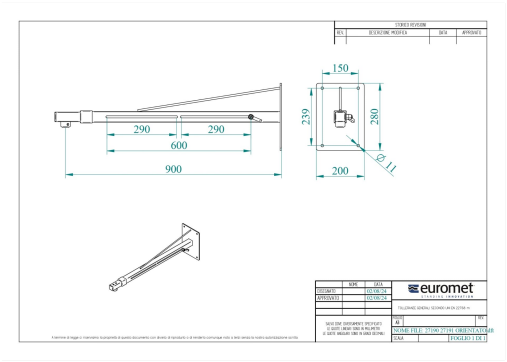

EUROMET Srl - P.Iva IT00852140425 - Z. I. Brodolini, 40B - 60025 - Loreto (AN) - Tel. +39.071976444 - Fax +39.071978988 - Vendite: sales@euromet.com - Ufficio Tecnico: tech@euromet.com - Amm. : amministrazione@euromet.com