M-08609 - CEILING MOUNT - FLAT PANEL TV UP TO 75"

SKU: 08609

Tilt angle	+/- 10°
MAX LOAD	50 kg
Standard VESA holes	200×200 200×100 100×100 75×75
Color	Black

Categories: Flat Panel Mounts, Flat Panel Ceiling Mounts

- Extendable, with bayonet style retraction
- Inclines up to +/- 10° and adjustable 360° rotation

You can mount it both in landcape and in portrait mode based on which VESA of the screen, using if necessary the optional adapters.

QUOTATION REQUEST
×

REQUEST A QUOTATION

Name *

Surname *

Company *

Email *

Message

☐I have read and accept the Privacy Policy (*)
Read our Privacy Policy

Send

×

GALLERY

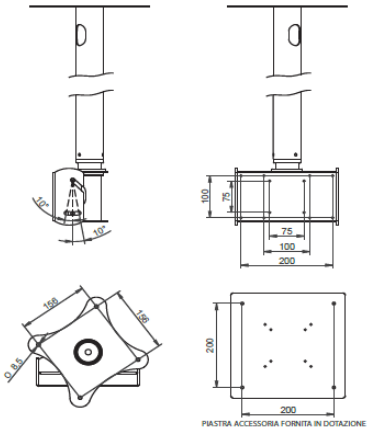
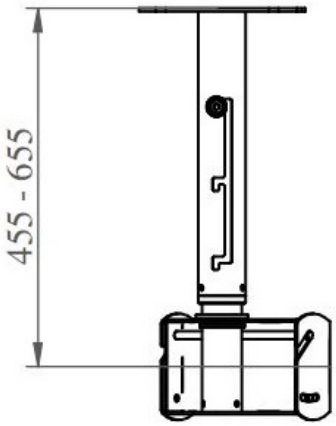
08609